RC10 B6.3 TEAM KIT

Driver:	Roger Mills	Event:	Mid West Super Cup
Date:	23/05/2021	Track:	Kidderminster
Qualify: 8	TQ: ☐	Main: A	Finish: 6	Best Lap Time:

Front Suspension:

Reset Forms

Ride Height:	16.5mm
Camber:	-1°
Toe:	0
Anti-Roll Bar:	None
Arm Type:	Kit gullwing
Tower Type:	Kit gullwing
Wheel Hex:	Kit
Steering Block:	+4mm trail
Caster Block Insert:	+5°
Bulkhead Type:	Steel (91898) {was using brass}
Kick-Up Angle:	25°
Notes:	

Bump Steer Spacing: 1mm

Ball Stud Spacing: 1mm

Axle Height:
- +3 ☐
- +2 ■
- +1 ☐
- 0 ☐

Steering Plate: Kit +1

Steering Stop Spacing: None

Ball Stud Spacing: 1mm

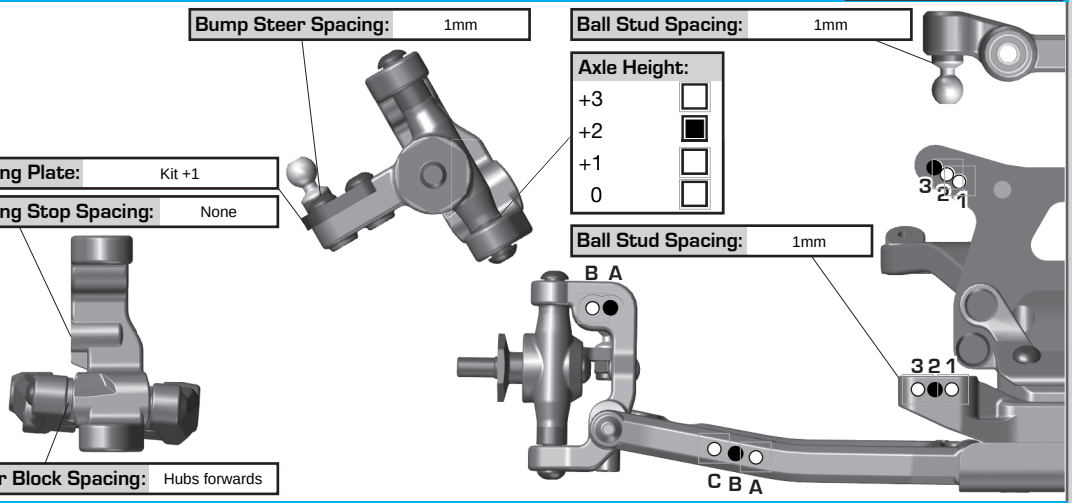

Caster Block Spacing: Hubs forwards

Rear Suspension:

Ride Height:	17mm
Camber:	-1°
Anti-Roll Bar:	None
Arm Type:	Kit plastic
Tower Type:	Kit (91881)
Arm Spacing:	Forwards
Wheel Hex:	6mm
Shock Mounting Position:	Front of Arm ■ Rear of Arm ☐
Hub Spacing:	Fwd ■ Mid ☐ Back ☐
CVA Bone Length:	69mm
CVA Axle Type:	Kit
Notes:	

C Mount: Aluminum ■ Brass ☐

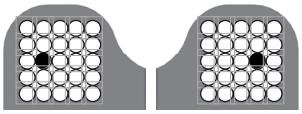

D Mount: Aluminum ■ Brass ☐

Axle Height:

▼0	3▲	+3
▼1	2▲	+2
▲1	2▼	+1
▲0	3▼	+0

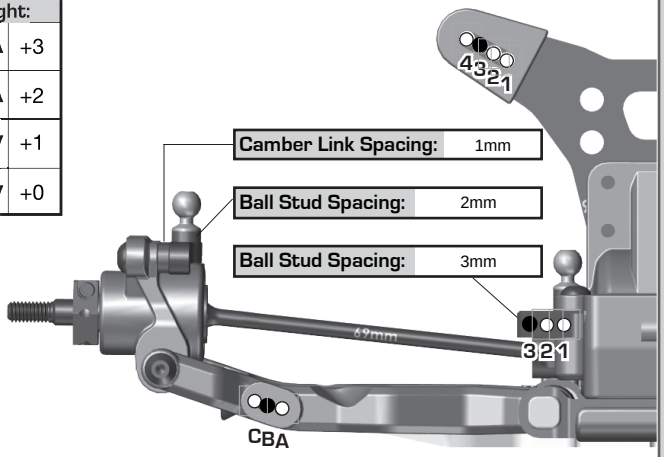

Camber Link Spacing: 1mm

Ball Stud Spacing: 2mm

Ball Stud Spacing: 3mm

Electronics:

Radio:	Futaba 7XC	Servo:	ETRONIX 2061
EPA:	Throttle: 100 %	Brake:	100 %
ESC:	HobbyWing XR10pro G2 Elite		
ESC Settings:	brake 85%, 12% drag, Throttle rate 1, boost 0, turbo 15		
Motor:	HobbyWing V10 G3		
Wind:	6.0	Timing:	25°
Pinion:	23	Spur:	78
Battery:	CENTRO 3200mAh		
Battery Position:	F5 (rear hole, forward post)		
Battery Weight:	40g		

Drivetrain:

Transmission: Laydown: ■ Layback: ☐

Differential: Ball Diff: ■

Height: +2 Gear Diff: ☐

Gear Diff Mass:

Notes:

Slipper Clutch:

Type:	kit
# of Pads:	Kit (2 LCF 19mm Octolock)
Setting:	Nearly lifting nose

Shocks:

	Front	Rear
Piston:	2x1.6 2mm THIN	2x1.7 2mm THIN
Fluid:	37.5wt	32.5wt
Spring:	V2 Red	V2 Grey
Limiters:	Int: 0 Ext: 0	Int: 0 Ext: 0
Stroke:	22.0mm	29mm
Eyelet Length:	LONG (+2)	Long (+2)
Cup Offset:	5mm	5mm

Notes: 91494 machined shock seal spacers

Track Info:

Size:	Small ☐	Medium ■	Large ☐	Extra Large ☐
Surface:	Dirt ☐	Carpet ☐	Astroturf ■	Multi Surface ■
Traction:	Low ☐	Medium ☐	High ■	Very High ☐
Moisture:	Dry ■	Damp ■	Wet ☐	
Condition:	Indoor ☐	Outdoor ■	Dusty ☐	Hard Packed ☐
	Bumpy ■	Grooved ☐	Smooth ☐	Loamy ☐

Temperature: Ambient: 14°C Track:

Notes:

Tires:

Front Tires:	Schumacher LP Cut Stagger Rib
Front Compound:	Yellow
Front Insert:	None
Rear Tires:	Schumacher Mini Dart
Rear Compound:	Yellow
Rear Insert:	Schumacher medium blue
Wheel (F/R):	AE
Notes:	Outer row cut off rears

Body, Weight:

Body:	Penguin Cab Forward
Front Wing:	None
Rear Wing:	Penguin B6/B64 light
Wing Angle:	4°
Chassis Length:	SHORT (kit)
Servo Weights:	Steel
Electronic Weights:	Steel
Total Vehicle Weight:	1560g

Vehicle Comments: